INDUSTRIAL WEIGHING SOLUTION™

CPS SERIES

Pallet Scale

- Pallet Jack with Electronic Scale
- Fast and Easy
- Portable
- Built in Printer

Scan with your smartphone to find more products

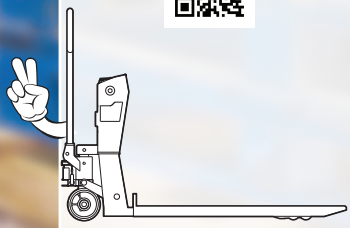

CAS

www.globalcas.com

TOTAL WEIGHING SOLUTION™

CPS SERIES

Pallet Scale

FEATURES

- Easy Operation
- Putting down the fork in stable with Oil Pressure
- Saving time with Carrying and Weighing at once
- Using Oil Pressure for putting down the fork in stable
- Versatile for any size room
- Heavy Duty for any size job

SPECIFICATIONS

Model		CPS-1			CPS-2		
SIZE	TYPE	A	B	C	A	B	C
	W(mm)	540	620	705	540	620	705
	L (mm)	1080	1080	1200	1080	1080	1200
Capacity(kg)		1000			2000		
Readability(kg)		0.5			1		
Overload protection(kg)		1500			2500		
Display		5digit LCD (Height 25mm)					
Power supply		DC6V/ 10Ah Battery (AC 110V/220V Charger)					
Operating Temp.		-10°C ~ 40°C					
Option		Printer					

APPLICATION

- Material handling
- Warehousing
- Industrial applictions

DIMENSIONS

Unit:mm

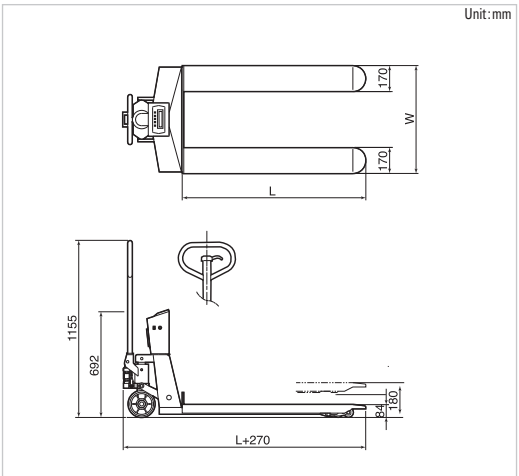

OPTIONS

- Printer

CAS BLDG., 1315, YANGJAE-DAERO,
GANGDONG-GU, SEOUL, KOREA
TEL_ 82 2 2225 3500
FAX_ 82 2 475 4668

http://www.globalcas.com

Specifications are subject to change for improvement without prior notice.