LABORATORY WEIGHING SOLUTION™

Halogen heating technology

Perfectly sealed up

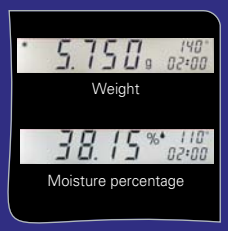

Simple operation display

CMB25

Moisture Analyzer

CMB25 is designed to quickly and effectively measure moisture of content, the CAS CMB Series moisture analyzers integrated halogen heating system with precision weighting technology to give a fast and accurate method for moisture content analysis.

Target market

- Traditional oven method Applications
- Pharmaceutical & Chemical Industries
- Manufacturing Quality Control
- Sewage / Water Treatment
- Agricultural and Dairy
- Paint Industry

CAS

TOTAL WEIGHING SOLUTION™

CMB25 | Moisture Analyzer

SPECIFICATIONS

Model	CMB25
Capacity	110g
Readability	0.05% / 0.005%
Repeatability	0.005g : 0.2% (3% sample)
	0.005g : 0.05% (>10% sample)
Temperature range	50°C to 160°C
Temperature steps	5°C
Heat source	Halogen
Weight calibration	50g
Temperature calibration	Temperature calibration Kit (Option)
Power	220VAC 50/60Hz
Pan size	dia. 90mm
Dimensions (DxWxH)	280 x 165 x 127mm
Net weight	2.1kg

FEATURES

- Optimum performance
- Round Halogen ramp
- Convenient for loading samples with Disposable Pans
- Simple operation
- Easy to clean
- RS-232C interface included
- In-Use Cover included
- Modern design

OPTIONS

- Calibration weight
- Temperature calibration kit
- Re-usable sample pans
- Disposable sample pan
- Glass Fiber pads
- Security device

Sample pan

Temperature calibration kit

Easy cleaning & maintenance

- Easy to set up
- Easy to use
- Inexpensive to maintain

Optimum performance

- Halogen heating technology begins sample drying process in seconds. Operating temperature range is 50 to 160°C in 5 increments. CAS CMB25 with halogen heating performs up to 40% faster than traditional Infrared method.

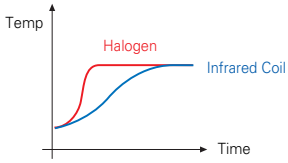

Heating technology comparison

Perfectly sealed up

- Perfectly sealed top-cover protects its performance from any distractions from outside.

Simple operation

- Designed to easy operation with 6 buttons.

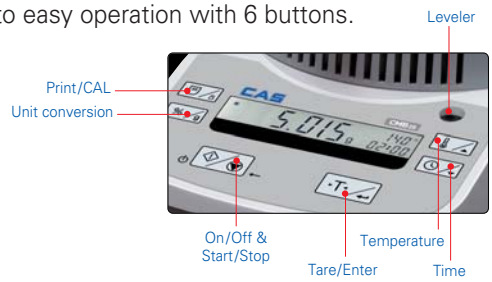

DIMENSIONS

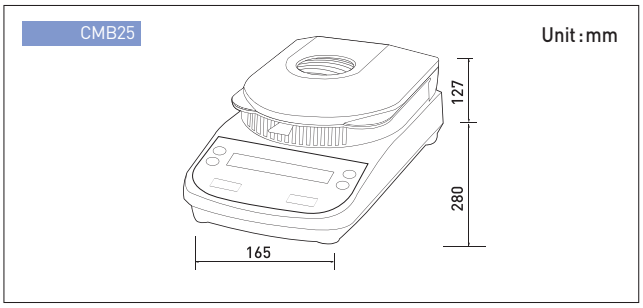

CAS BLDG., # 440-1, SUNGNAE-DONG,
GANGDONG-GU, SEOUL, KOREA

TEL_ 82 2 2225 3500
FAX_ 82 2 475 4668
http://www.globalcas.com

Specifications are subject to change for improvement without prior notice.

O-42118002